Electrolux PROFESSIONAL

Modular Cooking Range Line 900XP Half Module Gas Fry Top, Chromium Plated

ITEM #

MODEL #

NAME #

SIS #

AIA #



391053 (E9FTGDCS00) Half module gas Fry Top with smooth polished chrome cooking Plate, sloped, thermostatic control

Short Form Specification

Item No.

Smooth cooking polished chrome surface. 10 kW gas powered burners with thermostatic valve and self stabilizing flame. To be installed on open base installations, bridging supports or cantilever systems. Removable drawer below the cooking surface for the collection of grease and fat. Body and work top of unit entirely in stainless steel with Scotch Brite finish. Extra strength work top in heavy duty 2 mm stainless steel. Right-angled side edges to allow flush-fitting junction between units.

Main Features

- Unit to be mounted on open base cupboards, bridging supports or cantilever systems.
- Large drain hole on cooking surface permits the draining of fat into large 1 liter collector placed under the cooking surface.
- Safety thermostat with temperature markings for additional safety.
- Stainless steel high splash guards on the rear and sides of cooking surface. Splash guards can be easily removed for cleaning and are dishwasher-safe.
- Piezo spark ignition with thermostatic valve for added safety.
- The special design of the control knob system guarantees against water infiltration.
- IPX5 water protection.
- Temperature range from 90° up to 270°C.
- Polished chromium surface avoids the mixing of flavors when passing from one type of food to another.
- Cooking surface 15mm thick polished chrome for optimum grilling results and ease of use.
- Suitable for countertop installation.

Construction

- Cooking surface completely smooth.
- Unit is 930 mm deep to give a larger working surface area.
- All exterior panels in Stainless Steel with Scotch Brite finishing.
- AISI 304 stainless steel worktop, 2mm thick.
- Model has right-angled side edges to allow flush fitting joints between units, eliminating gaps and possible dirt traps.

Included Accessories

- 1 of Scraper for smooth plate fry tops PNC 164255

Optional Accessories

- Scraper for smooth plate fry tops PNC 164255 ❑
- Junction sealing kit PNC 206086 ❑
- Draught diverter, 120 mm diameter PNC 206126 ❑
- Matching ring for flue condenser, 120 mm diameter PNC 206127 ❑
- Support for bridge type installation, 800mm PNC 206137 ❑
- Support for bridge type installation, 1000mm PNC 206138 ❑
- Support for bridge type installation, 1200mm PNC 206139 ❑
- Support for bridge type installation, 1400mm PNC 206140 ❑

APPROVAL:

• Support for bridge type installation, 1600mm	PNC 206141	❑
• Water drain for half module fry tops	PNC 206153	❑
• Support for bridge type installation, 400mm	PNC 206154	❑
• Chimney upstand, 400mm	PNC 206303	❑
• Back handrail 800 mm	PNC 206308	❑
• Back handrail 1200 mm	PNC 206309	❑
• Flue condenser for 1/2 module, 120 mm diameter	PNC 206310	❑
• Grease/oil kit container for 700 line frytops (half and module) and 900 line frytops (module)	PNC 206346	❑
• Base support for feet or wheels - 1600mm (700/900)	PNC 206369	❑
• Chimney grid net, 400mm (700XP/900)	PNC 206400	❑
• Cloche for fry tops	PNC 206455	❑
• Kit G.25.3 (NI) gas nozzles for 900 fryers	PNC 206467	❑
• Side handrail-right/left hand (900XP)	PNC 216044	❑
• Frontal handrail, 400mm	PNC 216046	❑
• Frontal handrail, 800mm	PNC 216047	❑
• Frontal handrail, 1200mm	PNC 216049	❑
• Frontal handrail, 1600mm	PNC 216050	❑
• Large handrail - portioning shelf, 400mm	PNC 216185	❑
• Large handrail - portioning shelf, 800mm	PNC 216186	❑
• 2 side covering panels for top appliances	PNC 216278	❑
• Pressure regulator for gas units	PNC 927225	❑

ACC_CHEM

• C41 HI-TEMP RAPID DEGREASER, 1 pack of six 1 lt. bottles (trigger incl.)	PNC 0S2292	❑

The company reserves the right to make modifications to the products without prior notice. All information correct at time of printing.

Modular Cooking Range Line 900XP Half Module Gas Fry Top, Chromium Plated

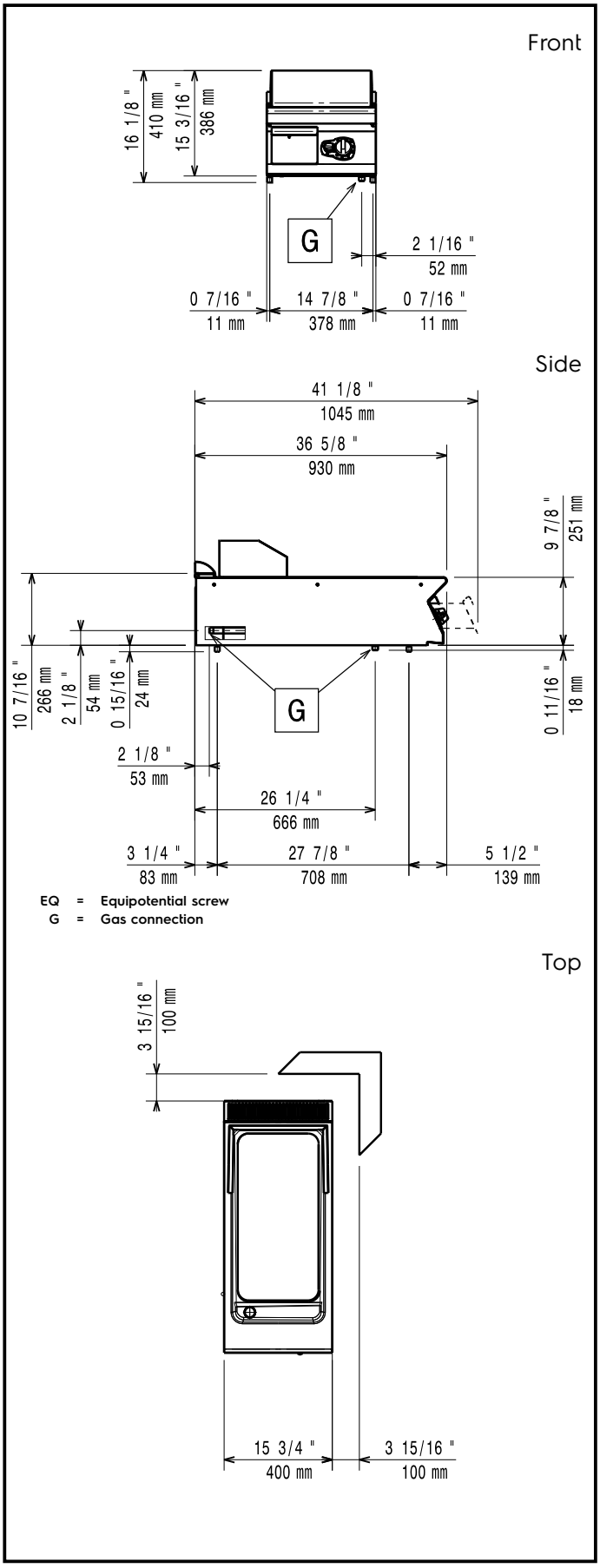

Gas

Gas Power:	10 kW
Standard gas delivery:	Natural Gas G20 (20mbar)
Gas Type Option:	LPG;Natural Gas
Gas Inlet:	1/2"

Key Information:

Working Temperature MIN:	90 °C
Working Temperature MAX:	270 °C
External dimensions, Width:	400 mm
External dimensions, Depth:	930 mm
External dimensions, Height:	250 mm
Net weight:	55 kg
Shipping weight:	57 kg
Shipping height:	580 mm
Shipping width:	460 mm
Shipping depth:	1020 mm
Shipping volume:	0.27 m³
[NOT TRANSLATED]	N9RG
Cooking surface width:	307 mm
Cooking surface depth:	624 mm

If appliance is set up or next to or against temperature sensitive furniture or similar, a safety gap of approximately 150 mm should be maintained or some form of heat insulation fitted.

The company reserves the right to make modifications to the products without prior notice. All information correct at time of printing.

2026.11.23